Seamless Handover with Buffer Prediction for Wireless Networks Based on IEEE 802.21

Yu-Chin Wang, Hsiang-Fu Lo, Ya-Chun Li, Wei-Tsong Lee

Department of Electrical Engineering, Tamkang University,
Tam-sui, Taipei County, 251, Taiwan, R.O.C.

695450949@s95.tku.edu.tw

wtlee@mail.tku.edu.tw

Abstract—Future generations of wireless networks will place great demands on the performance of radio access technology and the real-time multimedia applications provided by these new wireless environments. During the mobility between heterogeneous wireless networks, the quality of multimedia services for users depends heavily on seamless handover which should be provided by the middleware of IP to MAC protocol stack. IEEE 802.21 is designed for this reason which provided the basic platform for seamless handover between heterogeneous wireless networks. In this paper, a dynamically adjusted buffer component with algorithm for prediction of the buffer size is proposed to enhance the functionality of IEEE 802.21. The mechanism of proposed scheme included Service Specific Layer which decides the opportunity of handover, and adjusted Buffer which stores the temporal streaming data for applications between handover. The services and communication flows among service specific layer, buffer and IEEE 802.21 Media Independent Handover function are described and analyzed. According to analysis of the connection process and simulation, buffer prediction and pre-allocation could indeed reduce the influence of handover between heterogeneous wireless networks.

***Keywords*-Heterogeneous network handover, seamless handover, Media Independent Handover, IEEE 802.21**

I. INTRODUCTION

The information science and technology changes with each new day. The network communication and the devices for data processing are evolved into mobility. Generally speaking, the wireless network is dived into two systems: IEEE Family which was known as IEEE 802.11, WIMAX (IEEE 802.16), and Cellular system which was known as CDMA and WCDM.

When a mobile device moves, a network service exchanging will exactly happen. In order to solve these heterogeneous handover problems, IEEE proposed the IEEE 802.21[2] system , IEEE 802.21 proposes middle ware function, which was called Media Independent Handover function**(MIH)**. Although the **MIH** proposed a platform for heterogeneous wireless networks, during handover the user may still feel the distribution of network service exchange. In order to make the user feel nothing about the handover among heterogeneous wireless networks, a seamless handover is necessary. This paper proposes an IEEE 802.21 MIH based service system. This system proposes a Service Specific Layer and buffer device. Service Specific Layer composes of a Network selector device and a Buffer management Device. With this system, the Buffer management will predict the handover time, then inform the buffer device to store the required data to serve the user during handover. With this action the user will not feel the handover.

The rest of this paper organized as follows. Section 2 introduces the MIH system. Section 3 presents our system architecture and the algorithm of the handover time prediction system. Section 4 describes the experiment of our study. Finally, section 5 concludes the paper abd discusses future work.

II. BACKGROUND AND RELATED WORKS

A. IEEE802.21-MIH

The first standard of IEEE 802.21 [1] adopted in 2006. The purpose of the IEEE 802.21 is to achieve the seamless handover among IEEE 802 system and Cellular system. The basic architecture of IEEE 802.21 is establishing a Media Independent Handover function (MIH) between Layer 2 (MAC layer) and Layer 3 (network layer) as shown in Fig.1.

The Media Independent Handover function provides a Service Access Point (SAP) on the bottom in order to communicate to the physical layer (layers 1 and 2). And the above layer (layer3 above) can ask for required information through the Media Independent Handover function. The Media Independent Handover function provides three types of services: Event Service, Command Service, and Information Service. The MIH Event service (MIES) provides the service of Event classification, Event filtering. The MIH information service (MIIS) provides the capability for obtaining the necessary information for handover. It includes neighbour maps, link layer information, and availability of services. The MIH Command Service (MICS) accepts the management and control command from the above layers. It enables MIH users to manage and control link behaviour relevant to handovers and mobility

B. Related Research

There are many researches based on IEEE802.21MIH[2] - [8], With this paper [7]as an example, the author proposes a SCTP based IEEE802.21MIH middleware to achieve the purpose of Seamless handover. This paper proposed a handoff Decision device. This device can assist to solve the network select problem, operates the IEEE802.21 MIH executing

handover procedures, and the collation and evaluate of server provider informations.

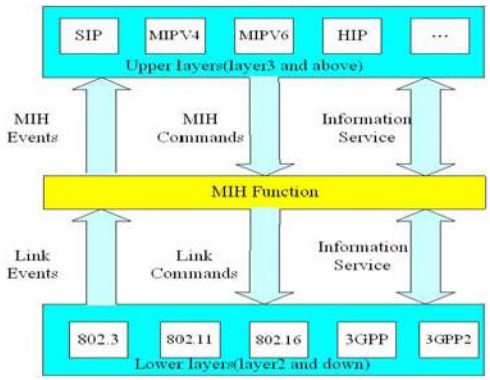

Fig.1. Architecture of MIH function

III. System Architecture and Implementation

In order to achieve the goal of heterogeneous network medium independent handover, this paper proposes an IEEE 802.21 MIH based middleware device. This middleware device is composed by three sub-areas, such as: Service Specific Layer (SSL), Buffer Device, and MIH Function, as shown in Fig.2.

When a mobile device moves from a network service into another network service, the Service Specific Layer can get the information of new network service provider by the Information Service of MIH. When handover Event triggers, MIH will send the MIH_Event to Service Specific Layer by Event Service. Then the Network Selector will evaluate which network service to selected, and the buffer management will predict the buffer size. After the evaluating and calculation, the Buffer Management Device will inform Buffer device to store the data of which the user needs when handover is proceeding.

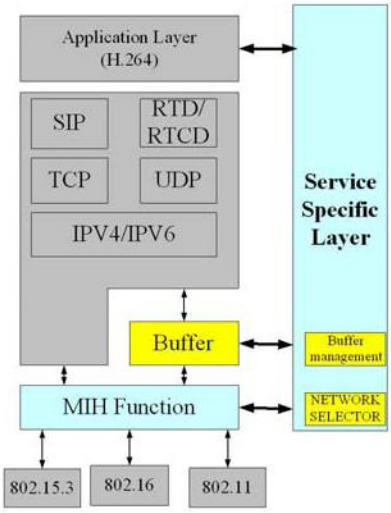

Fig.2. Architecture of our study

A. Service Specific Layer

This paper takes IEEE 802.16 and IEEE 802.11 two networks services as the example to explain the Service Specific Layer state process during handover, as shown in Fig.3. The Fig.3. shows the states of the middleware Device. The procedure starts at the first state(INITIAL), and then establish IP connection(CONNECTING). The third state is to establish an initial network connection(NETWORK_ENTRY), and then the Layer2 connection(LINK_UP). At this moment, if an event is triggered, it will start evaluating for network selection(Network Select_State). After the evaluation of our algorithm, the Service Specific Layer will decide if handover is necessary. If it does, it will communicate with the new service provider(SCAN state), after this, handover will be performed(Handover_Initiate state). It will disconnect the previous network service (Link Down state), and then return to the procedure of network connection establishing state(NETWORK_ENTRY state).

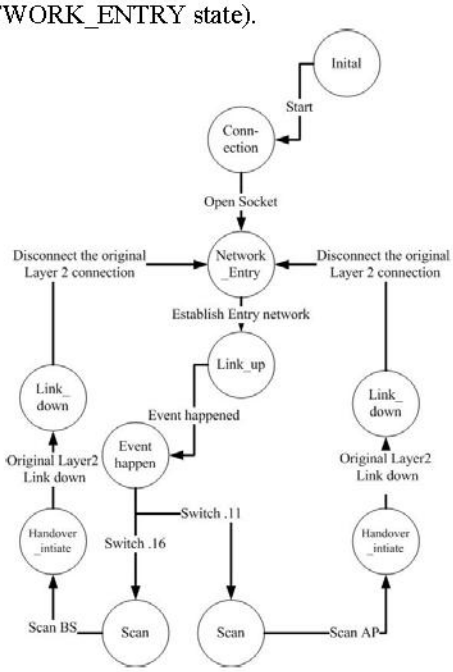

Fig.3. Middleware State process

B. Function and Architecture of Service Specific Layer

If there are multi network services, there will be a device judging if handover should be executed or not. That device is the Service Specific Layer. In order to reduce the transmission time and accelerate the handover decision, the Service Specific Layer is established between MIH layer and upper layer. The Service Specific Layer connects to the upper layers and accepts the Information Elements from MIH. When handover event triggers or handover command is proposed, the Service Specific Layer will choose the most suitable network according to the Information Elements.

The most important two parts of the Service Specific Layer is Network Selector and Buffer Management. When handover Event triggers, the Network selector will evaluate the network condition and decide the suitable network service. And the Buffer Management will predict the buffer size according to our proposed algorithm. Then it adjusts the buffer device to a

suitable size to store the data which is need to the user during handover is executing.

C. Network Selector device

In this paper, the network select Strategy is set IEEE802.16 as high priority. In other word, if IEEE 802.16 and IEEE 802.11 two kinds of network service coexist, the IEEE 802.16 network service will be adopted, and set the IEEE802.11 network service as backup network service.

D. Buffer device

When handover is executing, there will be a period the network service is disconnected, and the data can not transport. At this moment, the user will feel his service interrupted. The purpose of seamless handover is to let the users feel nothing when handover is in procedure. The Buffer Device is establish ed to achieve this purposed. The data of which the user required during the period of handover executing will store in the buffer device. And when handover executing, the user won't feel any disturbance of the service quality.

E. Buffer management device and the algorithm of Buffer size prediction

1) Buffer management device

When handover event triggers, the network selector will evaluate that handover is necessary or not. If handover start to execute, the network service will send a command to the Buffer Management device. Then the Buffer Management will predict the buffer size, the step of the buffer size predict execute as:

Step1. According to the handover time algorithm which is proposed, the buffer management device can calculate the require time of the network service exchange during handover. The value will be record as "TH".(the unit of TH is ms.)

Step2. With the value TH, the buffer management device can calculate the required data volume of which the user needs during the network service exchange time. The value of the data volume will be record as "BH".(the unit of BH is byte.) After calculating the value, buffer management will send a Buffer.req to the buffer device. The buffer will dynamically adjust the buffer size and store the required date to the volume of BH.

2) Algorithm of Buffer size prediction

In order to predict and dynamically adjust the Buffer size, the buffer management device should calculate the required time of network service exchange during handover executing. With the proposed algorithm, direct to various situation of network service, there will be an individual deductive method should be adapted. We can calculate the formula of network service exchange time (TH) by deducing the handover procedure. According to the service type of which is proving to the user, the Buffer management device can calculate the required data volume (BH) of this service proving for TH seconds.

In this section, in order to explain the Algorithm, there are two situations to be taken as examples, such as: 1. an IEEE.802.16 network service links up and the IEEE 802.11 network service going down, so the system executes handover. 2. The handover executes between two IEEE802.16 network services.

Scenario 1:

As shown in Fig.4. The left frames show the states of the Service Specific Layer. When the handover events triggers, the Service Specific Layer will enter to the state (1.network_select). In this state, Service Specific Layer evaluates which network service to adopt. After making a decision, the Service Specific Layer will send a MIH Scan.REQ to the MIH, and then it will enter the state (2.scan). The MIH will send a MIH_Scan.RSP to the Service Specific Layer after the scan behaviour, and the Service specific Layer will enter the state (3.Handover_initate). In this state, the Service Specific Layer not only transmits with the original network service, but also predicts the buffer size. After calculating, the Service specific Layer will send a command to the buffer device to order the buffer device to adjust the buffer size and store the require data. When the time TB seconds passed, the Service specific Layer will send MIH_Down.REQ to MIH, and the Service specific Layer will enter the state (4.Link down). When the Service specific Layer accepts the MIH_Down.RSP from MIH, the Service specific Layer enters the state (5.Network _Entry). In this states, the system will execute the ranging behavior. The movement of register to the BS, such as authentication, register service and SF/CS Capabilities, and etc will be finished in this state. As receive the MIH_DSA.RSP, the Service specific Layer can enter the state (6.Link_up). It means the connection with new network service has been established, and the handover has been completed.

With this handover procedure, when MIH_Down.REQ has been sent, until the MIH_Link_up.IND has been received. (figured in Fig.4. as Network service exchange time).The service is interrupted by the handover, and it is the Value TH(IEEE 802.11 to IEEE 802.16) which should be calculated by the algorithm. As shown in the Fig.4. The service interrupt time of service exchange from IEEE 802.11 to IEEE 802.16 is the sum of 2 period of the command sent from MIH to the IEEE802.11MAC, and 6 period of the command sent from Service Specific Layer to the MIH, and 4 period of the command sent from MIH to the IEEE 802.16 MAC，and 10 period of the request sent from IEEE 802.16 MAC to the BS，and the period of the Response time of the IEEE 802.11 MAC to disconnect the original network, and the period of the Response time of the Service Specific Layer, and finally the period of the Bs authenticated requests. It can be shown as the function:

$$TH(802.16to802.11)= 2Tmf+6Tsm+4Tmx+10Txb+ Tf1+(Ts1+Ts2)+(Tx1+Tx2 + Tx3 +Tx4+Tx5) +(Tb1+Tb2+Tb3+Tb4+Tb5)$$

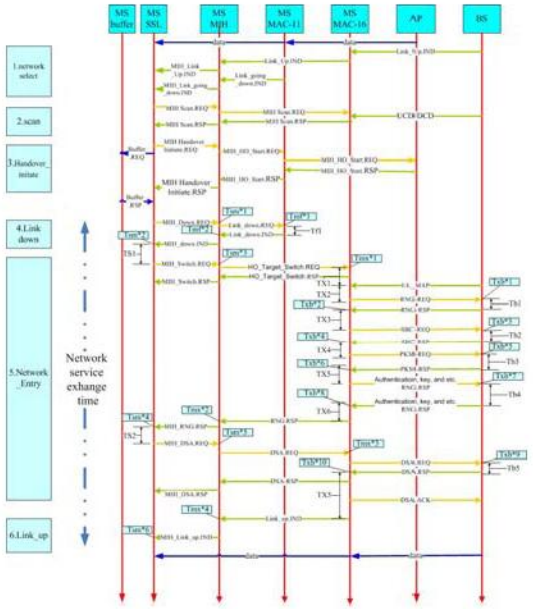

Fig.4. A flow of IEEE 802.11 Comm and IEEE 802.16 Link_up

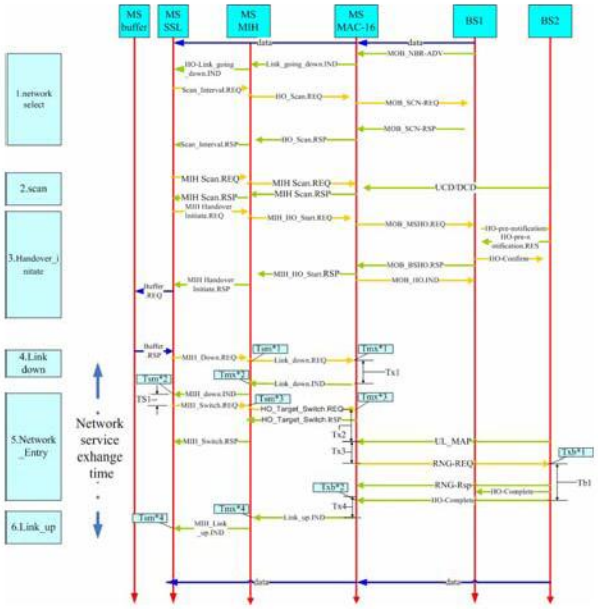

Fig.5. A flow of IEEE 802.16 Comm to IEEE 802.16 Comm

Scenario 2:

The same principle shows last section, with this handover procedure, when MIH_Down.REQ has been sent until the MIH_Link_up.IND has been received, the service is interrupted by the handover. As shown in the Fig.5. The service interrupt time of service exchange among two BS is the sum of 4 period of the command sent from Service Specific Layer to the MIH, and 4 period of the command sent from MIH to the IEEE 802.16 MAC, and 2 period of the request sent from IEEE 802.16 MAC to the BS, and the period of the Response time of the Service Specific Layer, and finally the period of the Bs authenticates requests. It can be shown as the function:

TH(802.16to802.16)=
=4Tsm+4Tmx+2Txb+Ts1+(Tx1+Tx2+Tx3+Tx4)+Tb1

With the above examples, it is acquainted that the service interrupt time of which trigged by each events and service interrupt time between any two kinds of network services are different. Therefore, direct to each situation there will be a homologous algorithm system adopted. When any situation happened, the most suitable service can be provided by our system.

IV. Experiments and Results

As shown in Fig.6. The experiment environment establishes a network service environment with two transmission path. The transmission rate of the path A is 0.8MB, and the transmission rate of path B is 0.5MB. The server transmits a data to the acceptor at second0.5 to second2.5. At first, data flow transmits through path A, and then we disconnect the path A at second 1.0. At this moment, the data flow transmits through the path B. Then we reconnect path A at second1.5, and disconnect the path B at second1.8. Finally, the data flow transmits through path A again.

During this experiment, there are twice handover executed.

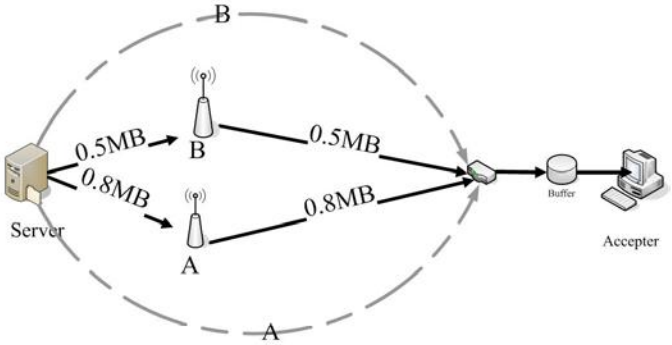

Fig.6. experiment environment

1) EXPERIMENT ITEM:

The main purpose of this experiment is looked for the relationship between buffer size and handover. With this experiment we can observe the effect of buffer size to the user during the handover executing.

There are three subjects to observe the effect of buffer size to the delay time of data transmission and the effect of buffer size to the delay time which is made by network service exchange, such as::

1. Record the packet receiving situation of the acceptor.

2. Dynamically adjust Buffer size, and then record the last packet receive time of the data.

3. Dynamically adjust Buffer Size, and record the interrupt delay time which is occurred by the network service exchange during handover executing.

2) EXPERIMENT RESULT

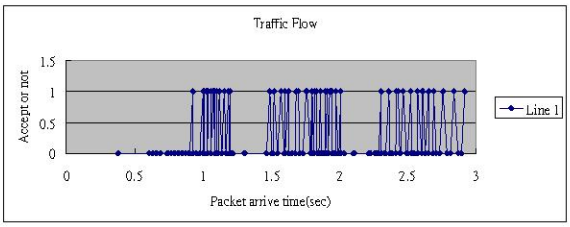

Fig.7. the packet receive of acceptor

Fig.7. is the result of the first subject. The Fig4.2 can observe that during the period of second1.22 to secon1.44、and second2.0 to second2.28,the acceptor does not receive any packet. It means during these period the data flow is interrupted by network service exchange、and the user may feel the interrupt of handover.

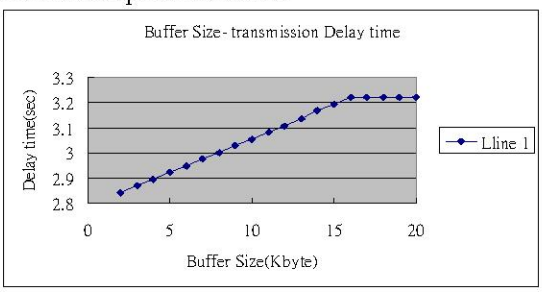

Fig.8. the relationship between buffer size and transmission delay time

Fig.8. is the result of the second subject. As shown in Fig.8. If the Buffer size is bigger, the receive delay time of the whole data is larger. Until Buffer Size is larger than the data transmission size, the Delay time can achieve a state of equilibrium. But at this time、the overflow buffer size is the wasted resources.

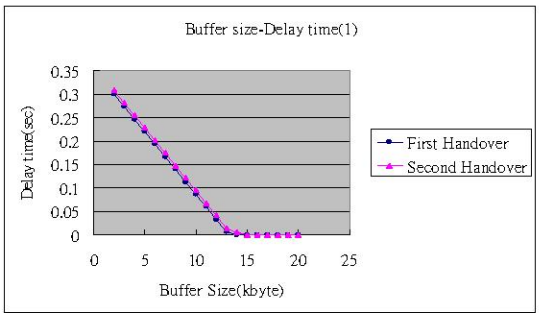

Fig.9. relationship between buffer size and the interrupt delay time for handover.

Fig.9. is the result of the final subject. The Fig.9.can observes that the buffer exactly reduces the interrupt delay time which is occurred by the network service exchange during handover. The lager the buffer size is, the shorter the Delay time is. When the buffer growth up to a certain size, the handover delay time can be absolutely avoid. In other words, the user will not feel the handover executing, and the purpose of seamless handover is achieved

V. CONCLUSIONS

This paper designed and proposed an IEEE 802.21 MIH based Heterogeneous handover system. If user enters a new network service, this system can get information of new service provider from MIH Information Service. When handover request is proposed, the Service Specific layer can get the relation information from MIH. After calculation and evaluation, the Service Specific Layer will predict the require data size of handover, then dynamically adjust Buffer size, and save the necessary data for network serve exchange. During the time of the original network service disconnect, and the new network service still not connected, the system can still provide the service to the user, and the Users will not feel the network service interrupted. That means this system can achieve the purpose of seamless handover.

For the future work, the network serve environment of IEEE 802.16 and IEEE 802.11 will be established to provide the service of predicting buffer size and dynamically adjusting buffer device. The network select algorithm of Service specific Layer is also an important future work, then this system may accurately evaluate the network service and provide a better service.

VI. ACKNOWLEDGEMENT

This work is supported by National Science Council, Taiwan, R.O.C. under numbered NSC-96-2628-E-032-002-MY3.

References

[1] http://www.ieee802.org/21/

[2] Jared Stein,"Survey of IEEE802.21 Media Independent Handover Services"April 24 , 2006http://userfs.cec.wustl.edu/%7Ejws2/mihs/index.htm

[3] Michael G.WILLIAMS , "Directions in Media Independent Handover",IEICE TRANS. FUNDAMENTALS, VOL.E88–A, NO.7 JULY 2005

[4] Luca Vollero, Filippo Cacace "Managing Mobility and Adaptation in Upcoming 802.21 Enabled Devices "ACM Press New York, NY, USA September 29, 2006

[5] Abhinav Garg & Kin Choong Yow"Determining the best network to handover among various IEEE 802.11 and IEEE 802.16 networks by a mobile device"IEEE CNF Nov. 15-17,2005

[6] Christian Dannewitz, Stefan Berg, Holger Karl"An IEEE 802.21-based Universal Information Service"University of Paderborn,BenQ Mobile

[7] Yung-Mu Chen, Min-Yen Lai, Shao-Chieh Lin, Shao-Chen Chang, Tein-Yaw Chung,"SCTP-Based Handoff Based on MIH Triggers"IEEE CNF Feb. 20-22, 2006

[8] Wei-Cheng Wang, Chih-Hung Hsu, Yung-Mu Chen, and *Tein-Yaw Chung，"SCTP-based Handover for VoIP over IEEE802. 11 WLAN Using Device Virtualization" IEEE ICACT 2007, pp. 1073-1076, 2007

[9] Ming-Hong Wu, Yun-Mun Chen, * Tein-Yaw Chung and Chih-Hung Hsu，"A Profile-Based Network Selection with MIH Information Service" National Science Council, Taiwan, R.O.C. under Contract No. NSC-95-2213-E-155-005.

[10] Chia-Tai Tsai, Yu-Tzu Lien, Rong-Hong Jan, Zi-Tsan Chou" Realization of Media Independent Handover process: an IEEE 802.16 network service as example" Mobile Computing 2007- The 13th Mobile Computing Workshop ,DaYeh University, Changhua, Taiwan April 20, 2007